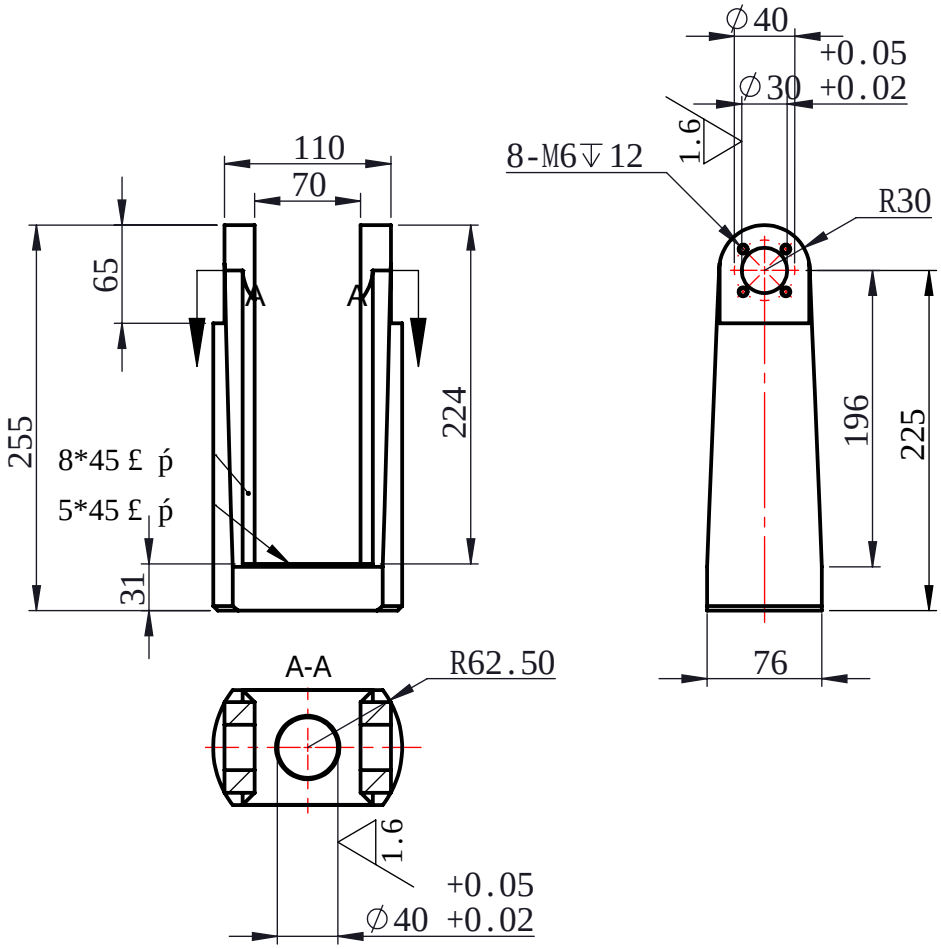

3.2

1 | 1

AY-B-4010-1000-8