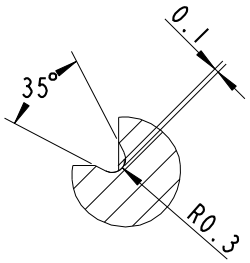

SEE DETAIL W
SCALE 6:1

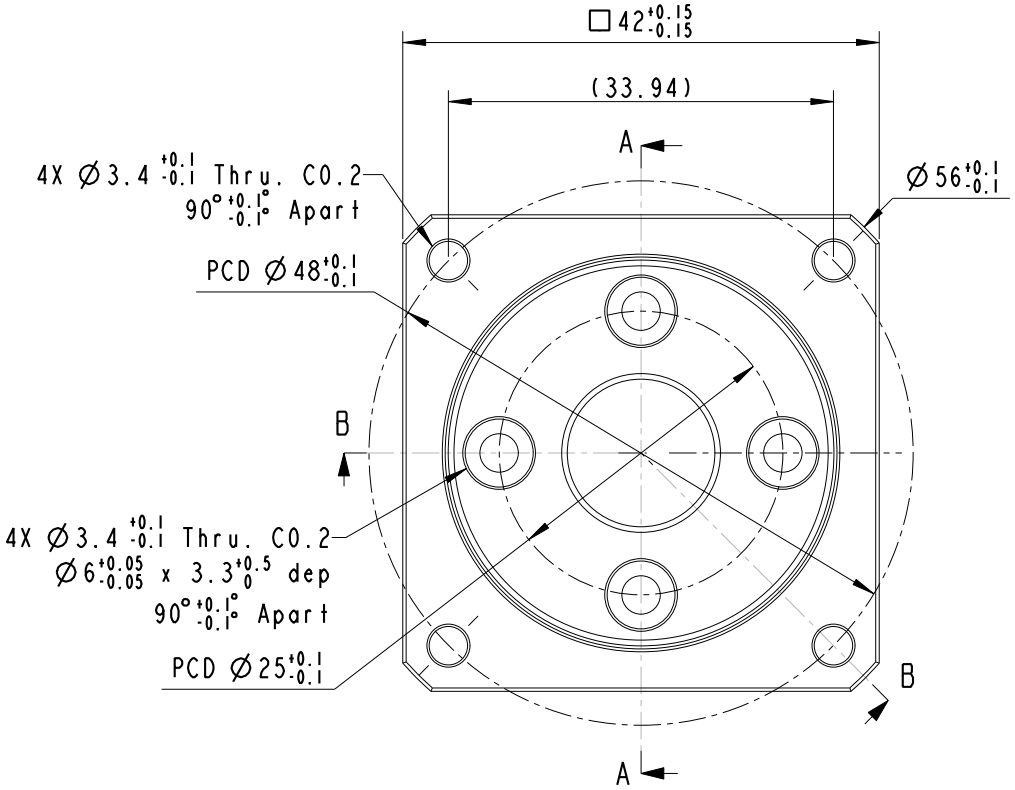

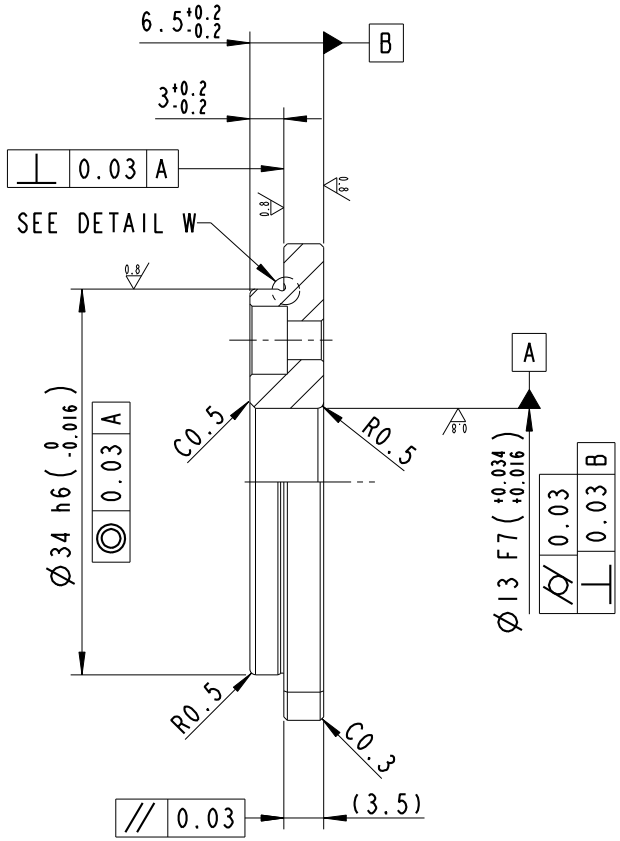

SECTION A-A

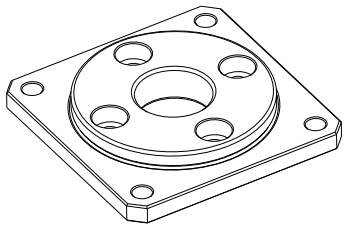

SCALE 4:5

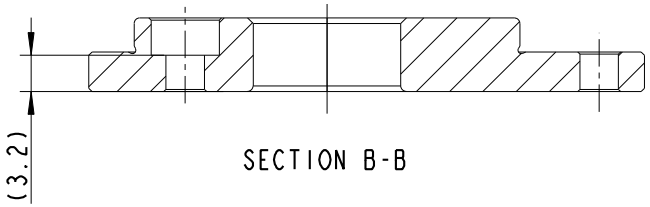

SECTION B-B

T6 Heat Treatment
Hardness 60±5HRB
Mass = 0.016 kg

NO	Material	Qty	Part No	Part Name
	AL6061		P1101001017	Fix Plate

APEX DYNAMICS, INC.					Dwg Name	FP-A-W42-17	Page	1 / 1
					Dwg No	P1101001017.	Size	A4
					Appover		Scale	3:2
					Checker		Date	30-Dec-20
APEX DYNAMICS, INC.	Rev No	Revision Content	Reviser	Date	Designer	Nadia	Drawer	邱蕙芬