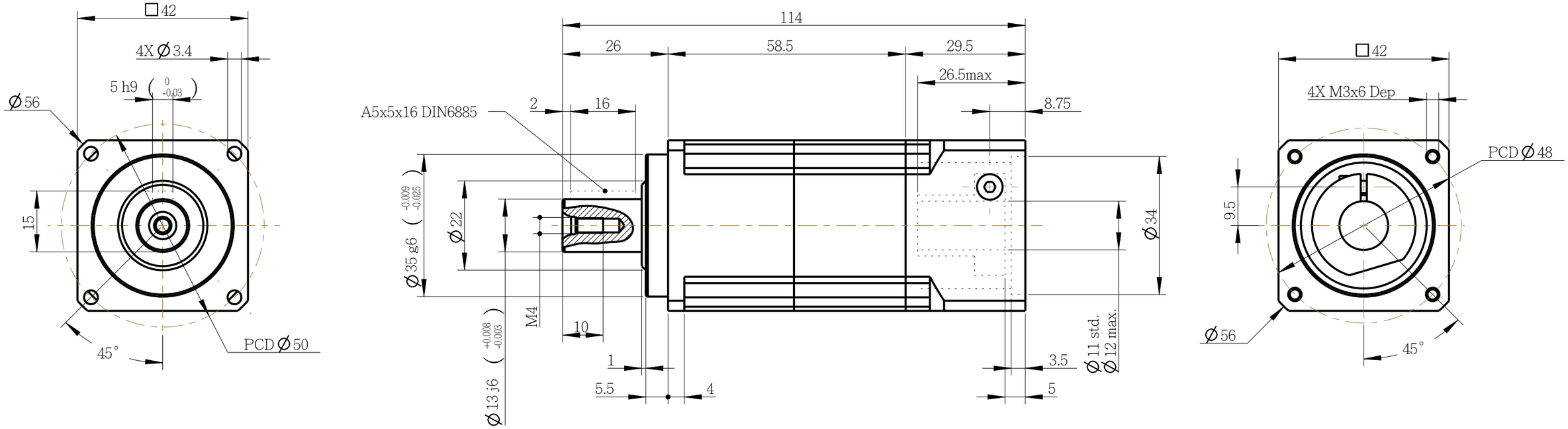

PART NO. AB0422-P0401100103 AB042-2, AD-W42-M42-3		APEX DYNAMICS, INC.
APPROVALS	DATE	TITLE AB042 2 STAGES AND MOTOR FLANGE MOUNTING
DRAWN 陳俊宇		
CHECKED		DWG NO. AB0422-P0401100103
APPROVED		SIZE A3 / SCALE 1:1 / REV 2.0