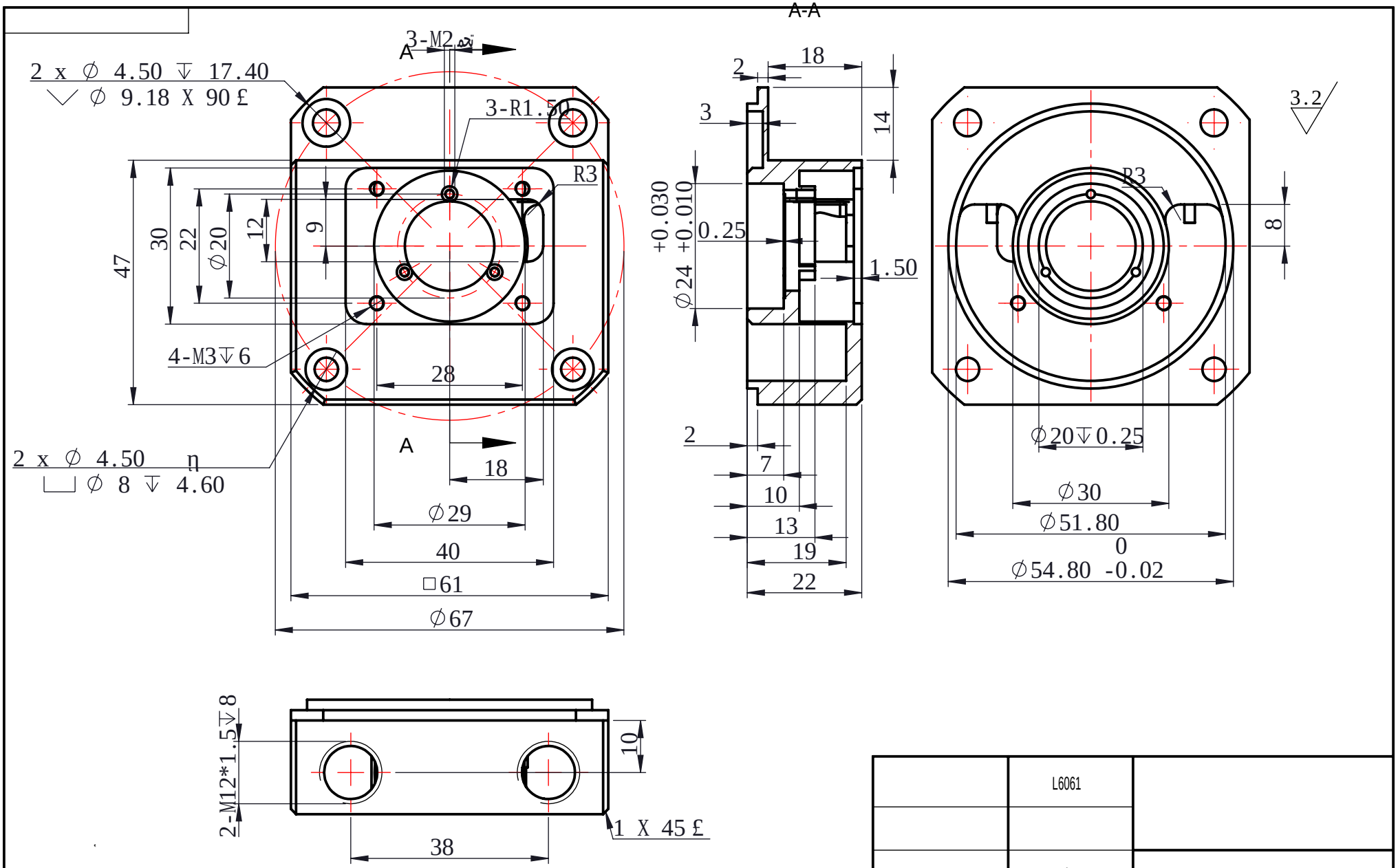

1. ý ˘ Ь ⅞ Â
2. طي ˘ ý 1*45 £ Â
3. ̀E ІUGB/T 1804-2000-m Â
4. ̀E ІUGB1184-80 Â

				L6061		
				1		-R
		18901199483				
				S	1:1	MSW-125-0092-0440-M1-S-R-N-P54-SN01-010/011
				1	1	

A4