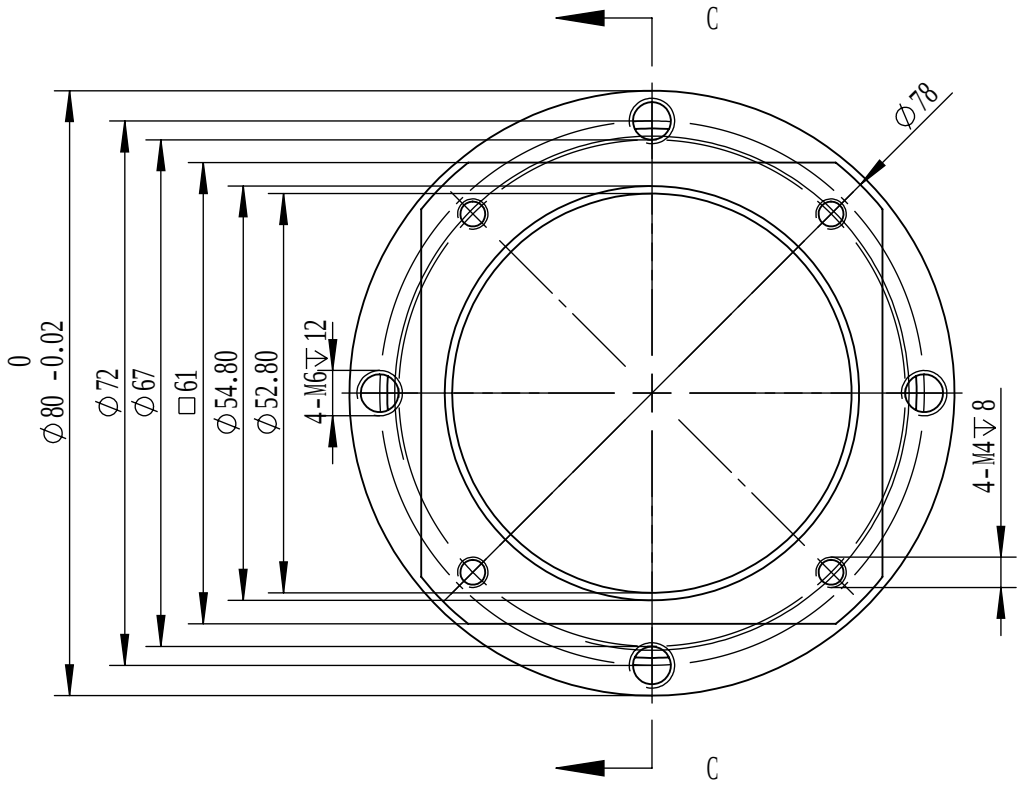

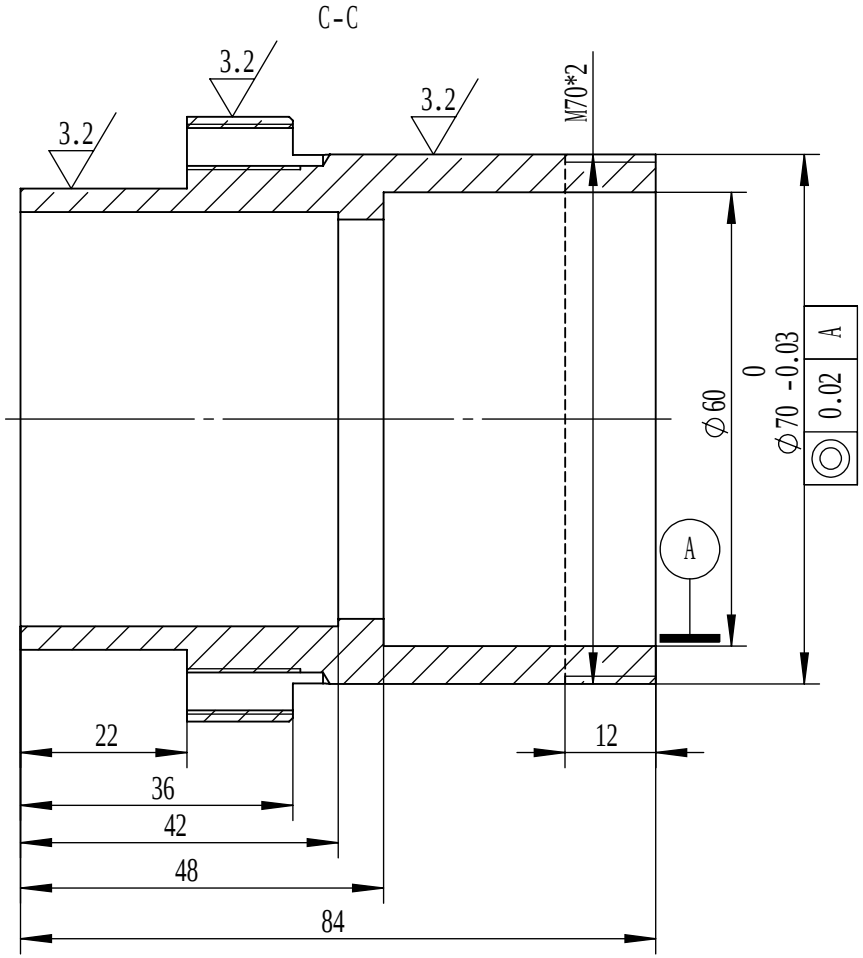

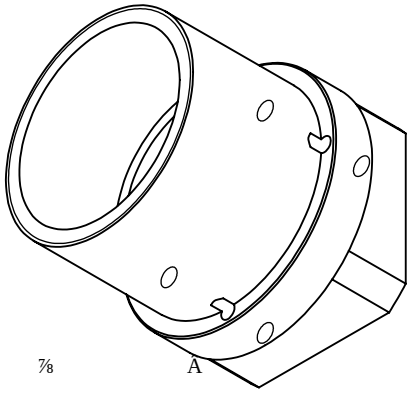

1. ́ ˘ Ь ⅞ Â
2. ط ˘ ́ 0.5*45 £ Â
3. ̀E ЮGB/T 1804-2000-m Â
4. ̀E ЮGB1184-80 Â

					6061		
					1		
				S		1:1	MSW-125-0092-0440-M1-S-A-N-P54-SN01-004/011
				1	1		

A4