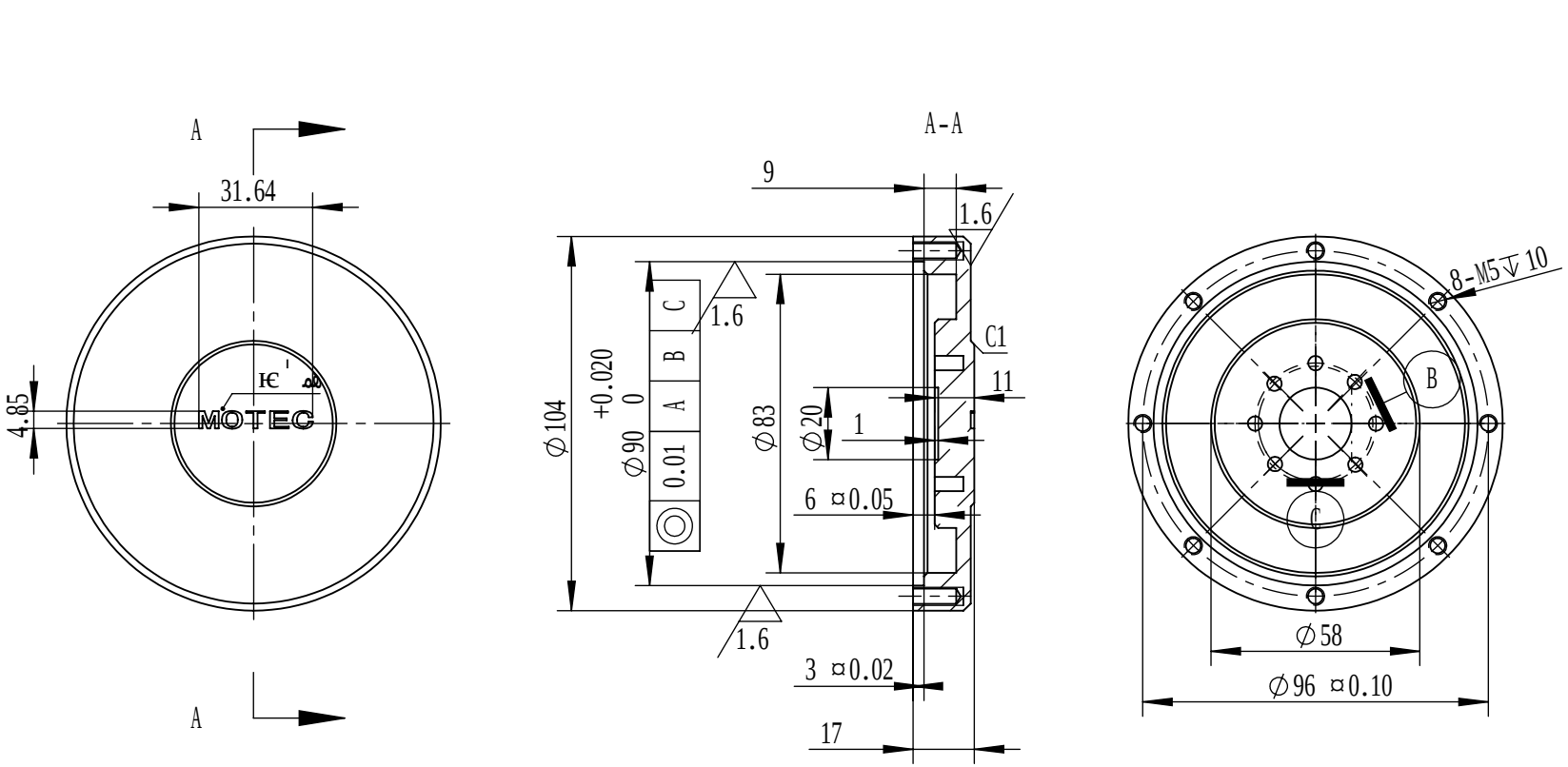

1. ŕ ˘ Ь ⅞ Â
2. طي ˘ ŕ 1*45 £ Â
3. ̀E ЬUGB/T 1804-2000-m Â
4. ̀E ЬUGB1184-80 Â

					45#		
					1		
		18901199483					
				S		1:2	MSW-125-0092-0440-M1-S-A-N-P54-SN01-006/011
				2	1		

A4

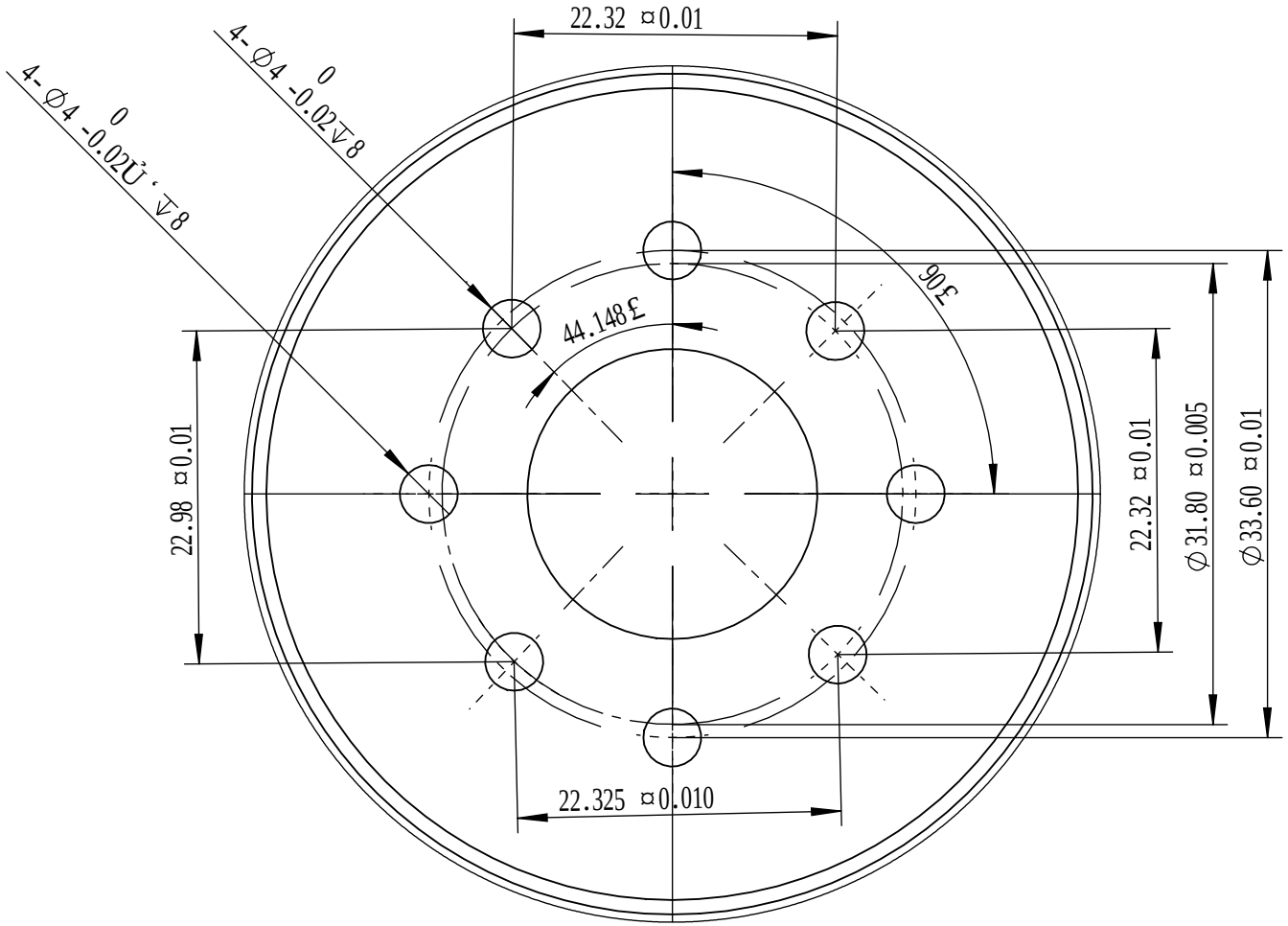

.

1. ý ˘ Þ ⅞ Â
2. طي ˘ ý 1*45 £ Â
3. ˋE ÞUGB/T 1804-2000-m Â
4. ˋE ÞUGB1184-80 Â

					45#		
					1		
		18901199483					
				S		1:2	MSW-125-0092-0440-M1-S-A-N-P54-SN01-006/011
				2	2		

A4