3.2

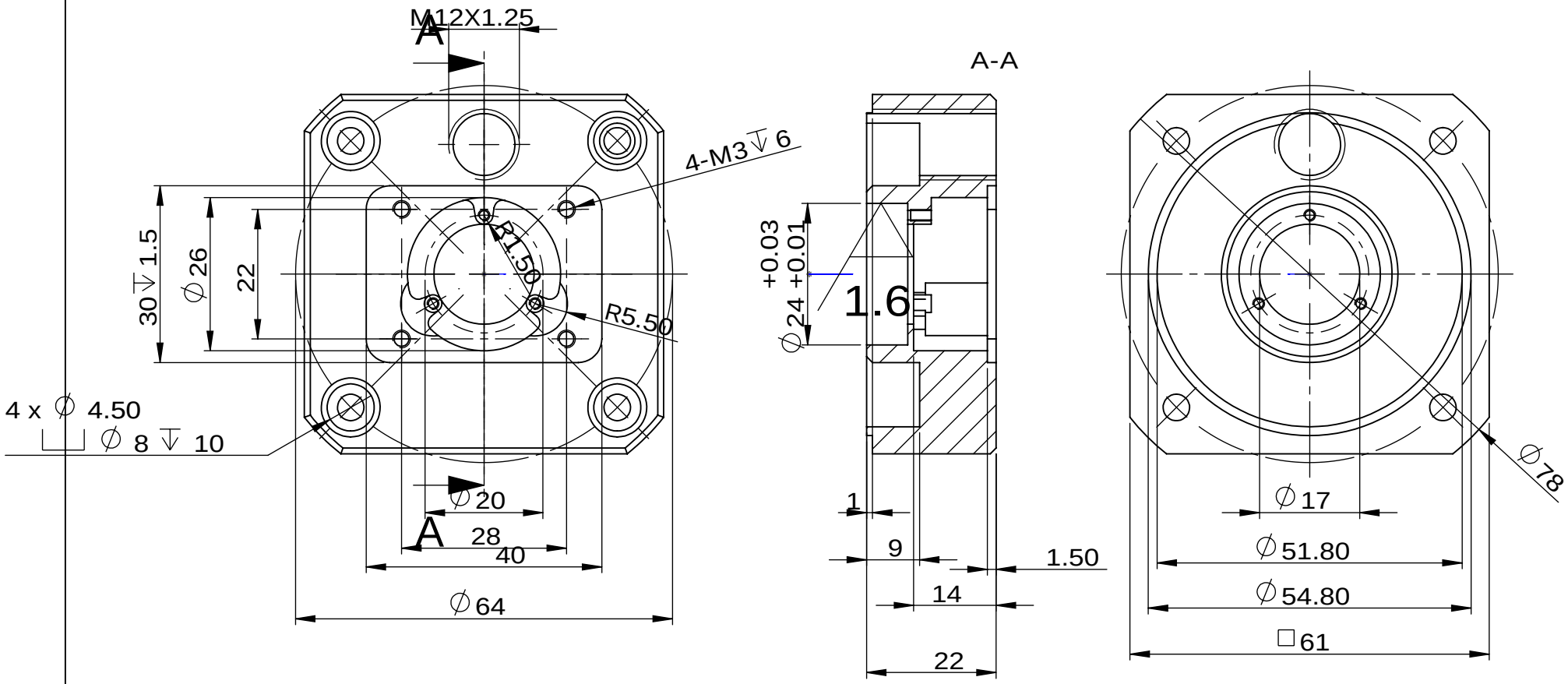

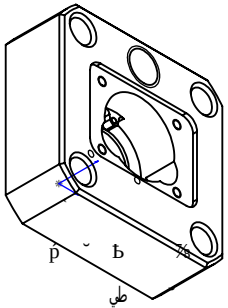

1. p ˘ Þ ⅞ Â
2. ط p 1*45 £ Â
3. ˋE ÞUGB/T 1804-2000-m Â
4. ˋE ÞUGB1184-80 Â

					6061		
					1		-
				S		1:1	MSW-125-0092-0440-M1-S-A-N-P54-SN01-010/011
				1		1	

A4